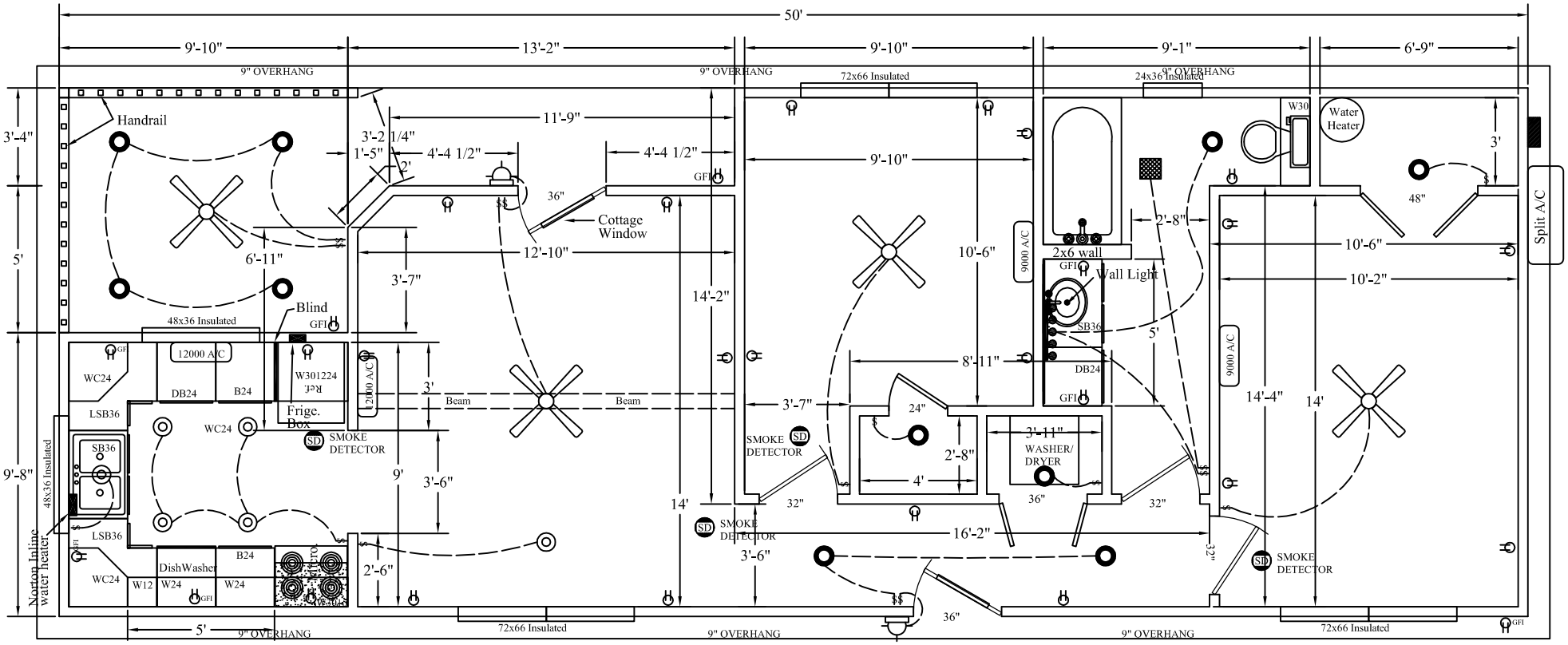

The Cottage - 18x50 Gable w/ Special Porch

Full Bath:

- Tub Combo
- Std. Commode
- Vanity
- Mirrored
- Tile

Kitchen:

- Double Sink
- Full 4 Burner Oven
- Full Size Refridge.
- Washer/Dryer Combo
- Microwave vent hood
- Water Heater
- Dishwasher
- Tile

Living Area:

- Ceiling Fan
- Central A/C & Heat
- Insulated Windows
- Tile

Bedroom:

- Ceiling Fan
- Walkin Closet
- Carpet

2011 GS-1850-Cottage

Tile	
Cabinets	
Paneling	
Roof	
Body	
Shutters	
Win J-Rail	
Door Color	
Win Color	

GENERAL SHELTERS ®

P:\AutoCad Dwg\DWG's\Building Div\Dwg Catalog\GS-1850-Cottage.dwg, 1/3/2011 6:16:24 AM